LPE50-70S

5,000-7,000 LB. CAPACITY

INTEGRATED LITHIUM-ION PNEUMATIC TIRE FORKLIFT

SPECIFICATIONS

DESIGNED FOR MATERIAL HANDLING IN TOUGH CONDITIONS

Looking to electrify your internal combustion fleet? This is the solution. The LPE50-70S series features large tires and plenty of ground clearance for both indoor and outdoor applications that require navigation over the roughest surface conditions. Big Joe's purpose-built, integrated Lithium-ion battery and powertrain deliver high performance in a package that was designed with operator comfort and productivity in mind.

Integrated Lithium: Power That Means Business

The UL-recognized Lithium-ion battery is designed and manufactured by Big Joe, in our state-of-the-art, automated facility to deliver the highest levels of quality, durability and reliability. The battery pairs seamlessly with the truck, requiring no additional displays, connection ports, power buttons or other complications. Simply buckle up, turn the key, release the parking brake and go.

Advanced Electrical System

Big Joe AC controller technology delivers high performance efficiently while significantly reducing maintenance costs and extending the vehicle's service life. The battery management system continuously monitors performance during operation and charging to optimize the battery's service life.

A Drivetrain for High Productivity and Low Operating Cost

The AC drive motor delivers fine inching control when precision matters, while also delivering high torque and smooth acceleration when it's time to get moving. Regenerative motor braking helps to reclaim energy, increasing run time and improving efficiency. Operators can appreciate the performance and lack of engine noise. Business owners can appreciate the lack of fuel costs and not needing to worry about unexpected—and expensive—engine breakdowns.

FEATURES

Charging Made Easy

Every LPE50-70S forklift comes standard with an onboard charger that plugs into a typical single-phase 120V or 240V wall outlet, allowing you to recharge almost anywhere. For operations that require faster charge rates, offboard chargers that conveniently connect to the truck's integrated charge port are available.

Operator Compartment: Your Employee's Office

The operator reaps the benefits of a wide-open operator compartment, large step, chamfered hood and natural operating position, all thanks to the integrated design of the battery. For operators accustomed to internal combustion forklifts, LPE50-70S feels natural.

Smooth and Efficient Hydraulic Controls

Ergonomic controls are within easy reach of the operator and allow for smooth, precise load control. Energy efficiency is optimized since the hydraulic pump only activates when flow is needed and utilizes proportional control.

Remote Work Isn't Just for the Office

LPE50-70S comes standard with a digital LCD display that enables wireless programming and diagnostics via Bluetooth or the standard telematics system that includes cloud-based maintenance monitoring, GPS tracking and related data services. When maintenance is required, features like a gas-spring assisted hood, removable floor plates and covers, and a design philosophy centered on simplicity help make the technician's job easier.

RUN TIMES

Power to Get the Job Done

Run times in the tables below are provided as a guide and do not account for all factors that may affect run time. It is highly recommended to perform a power study to more accurately determine your battery size and charging needs. Big Joe forklifts with Lithium-ion batteries come standard with telematics that enable monitoring of truck run time, charge time, energy usages and many other data points. This information can help you to make the most of your equipment and drive down operating costs.

Tailored to Your Specific Needs

Based on experience helping customers electrify their fleets and take advantage of the benefits of integrated Lithium-ion, Big Joe has categorized applications into three main types to help estimate run time:

Light Duty	Light duty applications, in terms of energy usage, account for a large portion of customer use cases. These are applications with level surfaces - where the truck typically handles 50% or less of its rated capacity.
Medium Duty	Medium duty applications are very common and involve handling loads that typically exceed 50% of the truck's rated capacity. There may be occasional: • Operation up and down ramps • Lifting to upper rack heights • Use of attachments such as fork positioners and multi-pallet handlers (i.e. single-doubles)
Heavy Duty	Heavy duty applications are not as common and include frequent: • Operation up and down ramps • Handling loads at or near the truck's capacity • Lifting to upper rack heights • Use of heavy duty attachments (clamps, rotators, push-pulls and turrets)

Stay Up and Running

The forklift's digital display includes a clear and easy-to-read battery indicator that shows the current state of charge. This helps operators to know exactly how much charge remains and remember to recharge as planned. Now, thanks to Big Joe's progressive warning system, the operator will be alerted should the battery state of charge fall too low. A lift interrupt and multiple levels of traction speed reduction help give the operator plenty of time to get to a charger without fear of over-discharging the battery.

LPE50S Run Time[1]			
	Application Intensity		
Battery Capacity (kWh)	Light Duty	Medium Duty	Heavy Duty
18.4	7h	4h 15m	3h
36.8	14h 15m	8h 30m	6h

LPE60S Run Time[1]			
	Application Intensity		
Battery Capacity (kWh)	Light Duty	Medium Duty	Heavy Duty
18.4	5h 30m	3h 15m	2h 15m
36.8	11h	6h 30m	4h 45m

LPE70S Run Time[1]			
	Application Intensity		
Battery Capacity (kWh)	Light Duty	Medium Duty	Heavy Duty
18.4	4h 30m	2h 45m	2h
36.8	9h	5h 30m	3h 45m

1. *Run times are provided for purposes of estimating battery and charger requirements and are not a guarantee. Run times are from fully-charged battery to lift interrupt. Actual run times vary widely based on truck duty cycle, ambient conditions and other factors. A product demo and/or power study are highly recommended.*

CHARGE TIMES

Flexible Charging That Works for You

Thanks to the in-house design and expertise of Big Joe, the charger, battery and forklift work seamlessly together. Big Joe's UL-certified chargers automatically adjust power based on the state of the battery in order to minimize charge time while optimizing the battery's overall service life.

To help make charging easy, all Big Joe LPE50-70S models come standard with an onboard charger that can accept both 120VAC and 240VAC, single-phase input. Cables are included for both supply voltages. The onboard charger automatically identifies input voltage and charges the battery accordingly.

For faster charging, optional offboard chargers, also called "wall chargers," are available. Offboard chargers are typically hard-wired and are capable of faster charge rates. A power study is recommended in order to select the optimal battery and charger combination for your application's unique needs. For convenience, all LPE50-70S models include a charge port for offboard power, accessible without opening the hood or removing panels.

Regardless of which charger you pick, the design is plug and play. That means minimal operator training and input is needed to keep your operation running smoothly.

Charger Specifications									
Charger Output Power	kW	Onboard Charger		Offboard Three-Phase Chargers					
		1.2 / 2.8		8	16	8	16	8	16
Input Voltage	VAC	120 / 240		208/220/240		480		600[1]	
Input Current	A	15 / 15		35	72	15	36	12	20
Output Current @ 80VDC	A	15 / 35		100	200	100	200	100	200
LPE50-70S Charge Time[2]									
Battery Capacity (kWh)	18.4	13h / 5h 45m		2h	1h 45m	2h	1h 45m	2h	1h 45m
	36.8	26h / 11h 15m		4h	2h	4h	2h	4h	2h

1. *Chargers with 600V input are for Canadian market only.*
2. *Charge times shown are estimates only and represent charging under ideal conditions and proper power supply to the charger. Charge times are based on recharging from lift interrupt to fully-charged.*

DIAGRAMS

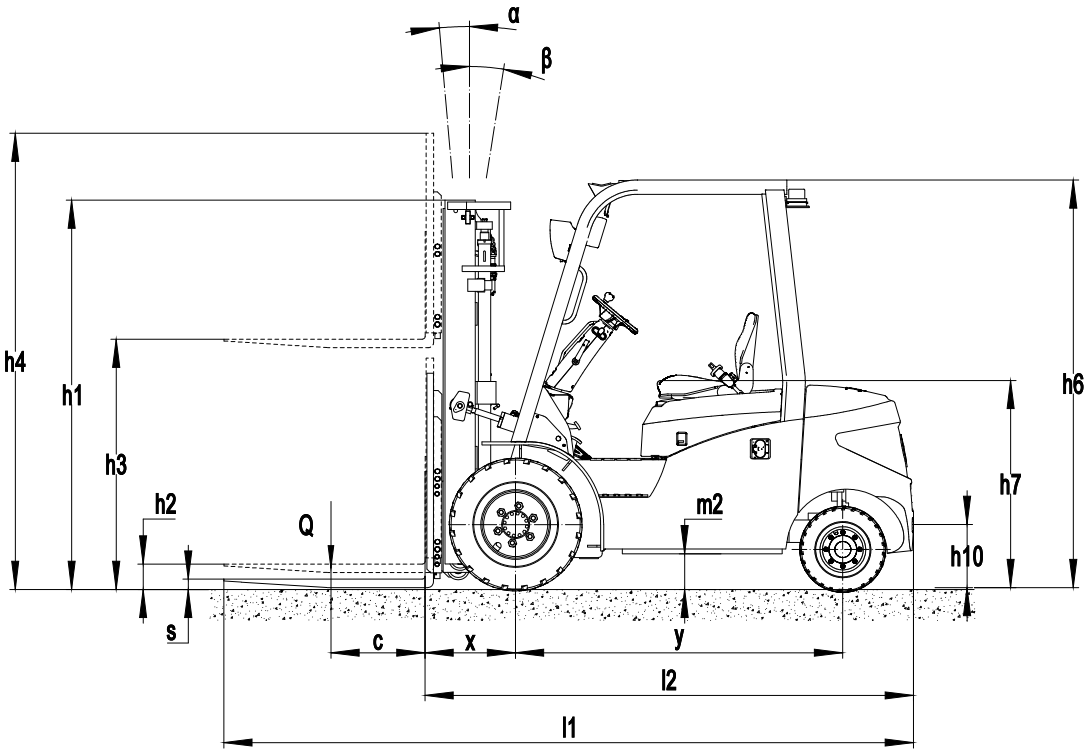
α
β
h4
h1
h3
h2
Q
m2
h6
h7
h10
s
c
x
y
l2
l1

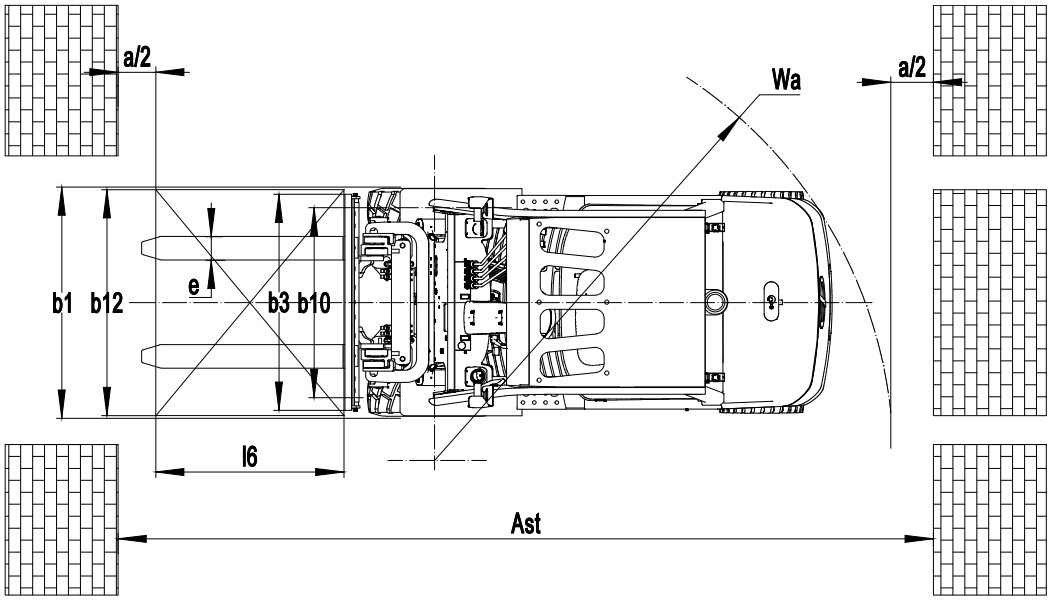
a/2
Wa
a/2
b1
b12
e
b3
b10
l6
Ast

SPECIFICATIONS

Distinguishing mark	1.1	Manufacturer			Big Joe		
	1.2	Model designation			LPE50S	LPE60S	LPE70S
	1.3	Drive			Electric		
	1.4	Operator type			Seated		
	1.5	Load capacity	Q	lb.	5000	6000	7000
	1.6	Load center distance	c	in.	24		
	1.8	Load distance, center of drive axle to fork	x	in.	19.5	18.9	19.1
	1.9	Wheelbase	y	in.	68.5		
Service weight	2.1	Service weight		lb.	9520	10290	10996
	2.2	Axle loading, laden (front / rear)		lb.	12665 / 1855	14280 / 2010	15925 / 2101
	2.3	Axle loading, unladen (front / rear)		lb.	4510 / 5010	4544 / 5746	4522 / 6474
Tires/chassis	3.1	Tire type			Solid pneumatic		
	3.2	Tire size, front			7.00-12-5.00	28x9-15	28x9-15
	3.3	Tire size, rear			18x7-8	200/50-10	200/50-10
	3.5	Wheels, number (front/rear) x=drive wheels			2x / 2		
	3.6	Tread width, front	b10	in.	38.4	39.8	39.8
	3.7	Tread width, rear	b11	in.	37.6		
Dimensions	4.1	Tilt of mast/fork carriage forward/backward	α / ß	°	6 / 6		
	4.2	Retracted mast height	h1	in.	89.2		
	4.3	Free lift	h2	in.	47	43.1	43.1
	4.4	Lift height	h3	in.	189	189	189
	4.5	Height, mast extended w/std LBR	h4	in.	229.3	232.1	232.1
	4.7	Height of overheard guard (cabin)	h6	in.	85.2	85.8	85.8
	4.8	Seat height / standing height	h7	in.	43	43.7	43.7
	4.12	Tow coupling height	h10	in.	13	13.6	13.6
	4.20	Length to face of forks	l2	in.	99.6	100	103.1
	4.21	Overall width	b1/b2	in.	45.4	47.6	47.6
	4.22	Fork dimensions	s x e x l	in.	1.6 x 4.8 x 42	1.6 x 4.8 x 42	2 x 4.8 x 42
	4.23	A, B fork carriage class / type A, B			2A	3A	3A
	4.24	Fork carriage width	b3	in.	41	43.3	43.3
	4.31	Ground clearance, laden, below mast	m1	in.	4.9	5.1	5.1
	4.32	Ground clearance, center of wheelbase	m2	in.	6.7	7.3	7.3
	4.34.1	Right angle stack aisle width[1]		in.	110.3	111.3	113.8
	4.35	Turning radius	Wa	in.	90.8	92.4	94.7
Performance Data	5.1	Travel speed, laden/unladen		mph	9.9 / 10.5		
	5.2	Lifting speed, laden/unladen		fpm	78.7 / 98.4		
	5.3	Lowering speed, laden/unladen		fpm	84.7 / 86.6		
	5.8	Max gradeability, laden/unladen		%	20 / 25	20 / 25	18 / 25
	5.10	Service brake			Hydraulic		
	5.11	Parking brake			Mechanical		
Electric	6.1	Drive motor rating S2 60min		kW	17		
	6.2	Lift motor rating at S3 15%		kW	26		
	6.4.1	Battery capacity[2]		kWh	36.8		
	6.4	Battery voltage / nominal capacity[2]		V/Ah	80/460		
Additional	10.1	Operating pressure for attachments		PSI	2750		
	10.2	Oil flow for attachments		gpm	8.5		
	10.5	Steering design			Hydraulic		

[1] Basic right angle stack (add load length and clearance)
[2] Alternate battery sizes available - see standard and optional equipment list

MAST SPECIFICATIONS

LPE50S												
Mast Type	Overall Dimensions (in.)[1]										Rated Capacity (lb.) at 24" Load Center[2]	
	Lift Height (Top of Forks)	Lowered Height	Extended Height				Free Lift Height					
			no LBR	36" LBR	40.9" LBR	48" LBR	no LBR	36" LBR	40.9" LBR	48" LBR	Carry Height	Max Fork Ht
3-Stage Full Free Lift	189	89.2	218.9	224.4	229.3	236.4	65.2	51.9	47.0	39.9	5000	4180
	197	92.5	224.8	232.3	237.2	244.3	68.5	55.3	50.4	43.3	5000	3960
	216.5[3]	102.4	244.5	252.8	257.7	264.8	78.3	65.1	60.2	53.1	5000	3740

LPE60S												
Mast Type	Overall Dimensions (in.)[1]										Rated Capacity (lb.) at 24" Load Center[2]	
	Lift Height (Top of Forks)	Lowered Height	Extended Height				Free Lift Height					
			no LBR	36" LBR	40.9" LBR	48" LBR	no LBR	36" LBR	40.9" LBR	48" LBR	Carry Height	Max Fork Ht
3-Stage Full Free Lift	189	89.2	217.3	227.2	232.1	239.2	61.0	48.0	43.1	36.0	6000	4840
	197	92.5	223.2	235.1	240.0	247.1	65.7	52.7	47.8	40.7	6000	4620
	216.5[3]	102.4	242.9	255.7	260.6	267.7	75.6	62.8	57.9	50.8	6000	4400

LPE70S												
Mast Type	Overall Dimensions (in.)[1]										Rated Capacity (lb.) at 24" Load Center[2]	
	Lift Height (Top of Forks)	Lowered Height	Extended Height				Free Lift Height					
			no LBR	36" LBR	40.9" LBR	48" LBR	no LBR	36" LBR	40.9" LBR	48" LBR	Carry Height	Max Fork Ht
3-Stage Full Free Lift	189	89.2	217.3	227.2	232.1	239.2	61.0	48.0	43.1	36.0	7000	6380
	197	92.5	223.2	235.1	240.0	247.1	65.7	52.7	47.8	40.7	7000	5950
	216.5[3]	102.4	242.9	255.7	260.6	267.7	75.6	62.8	57.9	50.8	7000	5510

1. *LBR = Load Backrest Extension, measured from top face of fork to top of LBR*
2. *Rated capacities shown with standard equipment. Removing hang-on sideshifter increases capacity at Max. Fork Height by approximately 200 lb.*
3. *Mast available by special order only*

Additional lift heights availble by request

STANDARD/OPTIONAL EQUIPMENT

● Standard
○ Optional

Electrical System	80V electrical system	●
	Weather-resistant IPX4 rating, suitable for most outdoor use	●
	Brushless AC motor drive system w/regenerative braking	●
	Brushless AC hydraulic pump motor	●
	Transistor motor controllers with infinite speed control	●
	Corner speed control	●
Battery and Charging	UL-Recognized 36.8kWh (80V / 460 Ah) integrated lithium-ion battery	●
	UL-Recognized 18.4kWh (80V / 230 Ah) integrated lithium-ion battery	○
	Onboard 1.2kW / 2.8kW battery charger for use with 120V / 240V AC single-phase power (15A / 35A)	●
	320A DIN connector for offboard charging	●
	UL-Certified offboard 1.2kW / 2.8kW battery charger for use with 120V / 240V AC single-phase power (15A / 35A)	○
	UL-Certified offboard 8kW battery charger for use with 208V / 220V / 240V AC three-phase power (100A)	○
	UL-Certified offboard 8kW battery charger for use with 480V AC three-phase power (100A)	○
	UL-Certified offboard 16kW battery charger for use with 208V / 220V / 240V AC three-phase power (200A)	○
	UL-Certified offboard 16kW battery charger for use with 480V AC three-phase power (200A)	○
	Telemetry with over-the-air updating	●
Drive System	Dry drum service brakes	●
	Foot-applied / foot-released parking brake lever	●
	Power-assisted steering	●
Wheels & Tires	Pneumatic-shaped solid drive tires	●
	Non-marking pneumatic-shaped solid tires	○
Front End Equipment	3-stage full free-lift mast	●
	Mast tilt: 6° forward 5° backward	●
	Hook type carriage	○
	Hook type integral sideshifting carriage	○
	Hook type carriage with hang-on sideshifter	●
	Hook type carriage with hang-on sideshifter and fork positioner	○
	40.9” high load backrest	●
	48” high load backrest	○
	60” high load backrest	○

Hydraulics	3-way hydraulic control valve	○
	4-way hydraulic control valve	●
	1 auxiliary hose group	○
	2 auxiliary hose group	●
	2 auxiliary hose extension kit for use with attachments (assembly required)	○
	Quick-disconnect (Qty 2) kit for use with auxiliary hose extension kit	○
	Clamp interlock (required for installation of clamping attachments)	○
Operator Compartment	2-way adjustable full-suspension vinyl seat	●
	Entry assist grab handle	●
	Rear grab handle with integrated horn button	●
	Cup holder	●
	Digital LED display with Bluetooth service connectivity	●
	Steering wheel with integrated spinner knob	●
	12V accessory charging port	●
	Full steel cab with heater	○
	Full steel cab with heater and air conditioning	○
Lights and Alarms	LED light package (headlights, brake lights, turn signals)	●
	LED strobe light	●
	Rear-facing blue spot light	●
	Front-facing blue spot light	○
	Back-up alarm	●
	Self-adjusting back-up alarm	○
	Horn	●
	White noise sound generator (always on)	○
	Left and right red side curtain lights	○
Warranty	84 months / 12,000 hours - Integrated lithium-ion battery warranty	●
	36 months / 6,000 hours - Frame & powertrain warranty	●
	24 months / 4,000 hours - Full truck warranty	●

Established in 1951, Big Joe is a customer-driven North American material handling equipment company. We distribute innovative products for in-between-handling applications, purpose-built counterbalanced lithium forklifts, and market-leading autonomous solutions. Based in Madison, Wisconsin, we provide engineering expertise, customer service, aftermarket parts, and warranty support to our extensive dealer network and customers.

Certification: Big Joe lift trucks are built in compliance with ANSI B56.1 and OSHA section 1910.178(A)(2). Lift trucks specifications are subject to change without notice. Any specifications critical to the intended application of the forklift should be reviewed with your Big Joe dealer. Images may show optional equipment not available in all regions.

BIG JOE

630-916-2600
sales@bigjoeforklifts.com
bigjoeforklifts.com

2026-01_30_V01