LXE40

4,000 LB. CAPACITY

INTEGRATED LITHIUM-ION PNEUMATIC TIRE FORKLIFT

SPECIFICATIONS

INTEGRATED LITHIUM-ION PROVIDES SIMPLICITY AND REDUCES COST.

Many businesses know that it takes Lithium-ion to get the most efficiency, uptime and cost effectiveness out of an electric forklift. And now customers are learning that it takes an integrated power source for simplicity of operation and optimal ergonomics. The Big Joe LXE40 delivers all of the above—an optimal package that supports the operator while driving down cost of operations. Big Joe is one of the few suppliers to develop and produce both forklift and battery, so customers have one expert supplier to help from end to end.

FEATURES

Integrated Lithium: Simple and Effective

The UL-recognized Lithium-ion battery is designed and manufactured by Big Joe, in our state-of-the-art, automated facility to deliver the highest levels of quality, durability and reliability. The battery pairs seamlessly with the truck, requiring no additional displays, connection ports, power buttons or other complications. Simply buckle up, turn the key and go.

A Battery withouth Headaches

The Lithium-ion battery is completely maintenance-free. That means no watering, toxic fumes or corrosive and explosive gases. And you only need one battery per truck—no cranes, hoists or roller systems for swapping batteries are required. This simplicity not only saves space in your warehouse—it also reduces overhead since staffing doesn't need to be dedicated to battery services. And since the battery can fully recharge in two hours and doesn't need to cool down after charging, your truck can spend more time working.[1]

A Drivetrain for High Productivity and Low Operating Cost

The brushless AC drive motor provides good stop-and-go performance. Thanks to the fully-electric braking system, there is no need for brake maintenance or fluid checks, and energy from braking is captured and used to recharge the battery. Operators don't need to take time to apply or release the parking brake thanks to the electromagnetic parking brake, reducing fatigue over the course of a shift.

1. *2-hour charge time is based on the use of a 150A offboard charger operating under ideal conditions with proper power supplied to the charger. Actual charge times can increase in adverse environmental conditions or if sufficient power is not provided to the charger.*

FEATURES

Charging Options for your Application

Unlike some other suppliers, Big Joe provides—and supports—the forklift, battery and charger. LXE40 is available with a range of chargers, from a single-phase 120V/240V option that plugs into a typical wall outlet, to a 7.2kW industrial charger. Each charger easily plugs into the integrated charge port on the side of the truck for fast, intuitive operation.

Operator Compartment: Your Employee's Office

The operator reaps the benefits of a wide-open operator compartment, large step and natural operating position, all thanks to the integrated design of the battery. Cowl-mounted hydraulic levers are designed to make it easy to get on and off the truck from either side. The long step and open space will be welcome features for operators accustomed to typical electric forklifts designed around bulky lead acid batteries.

Advanced Electrical System

Big Joe AC controller technology delivers high performance efficiently while significantly reducing maintenance costs and extending the vehicle's service life. The battery management system continuously monitors performance during operation and charging to optimize the battery's service life.

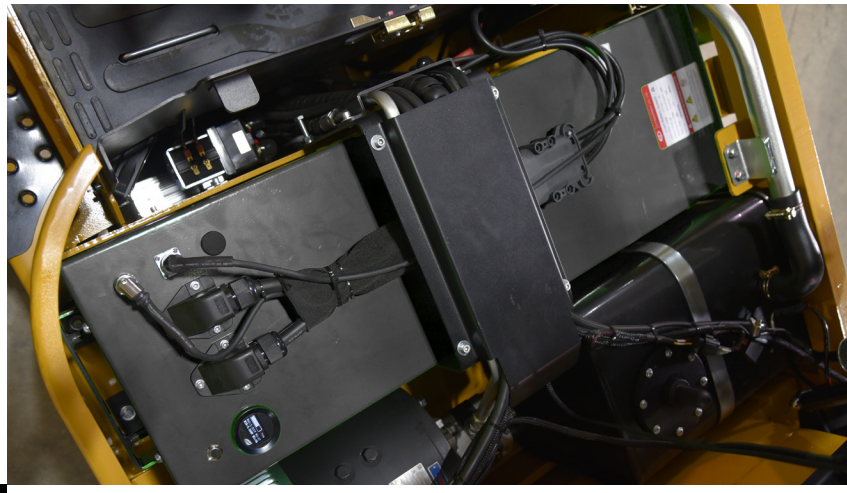

Wireless Telematics for Operational Insights

LXE40 comes standard with onboard telematics that track key utilization metrics like key-on time, energy consumption, error codes and recharging patterns. This data can help spot missed opportunities for recharging, identify peak usage times and monitor the health of your equipment.

RUN TIMES

Power to Get the Job Done

Run times in the tables below are provided as a guide and do not account for all factors that may affect run time. It is highly recommended to perform a power study to more accurately determine your battery size and charging needs. Big Joe forklifts with Lithium-ion batteries come standard with telematics that enable monitoring of truck run time, charge time, energy usages and many other data points. This information can help you to make the most of your equipment and drive down operating costs.

Tailored to Your Specific Needs

Based on experience helping customers electrify their fleets and take advantage of the benefits of integrated Lithium-ion, Big Joe has categorized applications into three main types to help estimate run time:

Light Duty	Light duty applications, in terms of energy usage, account for a large portion of customer use cases. These are applications with level surfaces - where the truck typically handles 50% or less of its rated capacity.
Medium Duty	Medium duty applications are very common and involve handling loads that typically exceed 50% of the truck's rated capacity. There may be occasional: • Operation up and down ramps • Lifting to upper rack heights • Use of attachments such as fork positioners and multi-pallet handlers (i.e. single-doubles)
Heavy Duty	Heavy duty applications are not as common and include frequent: • Operation up and down ramps • Handling loads at or near the truck's capacity • Lifting to upper rack heights • Use of heavy duty attachments (clamps, rotators, push-pulls and turrets)

Stay Up and Running

The forklift's digital display includes a clear and easy-to-read battery indicator that shows the current state of charge. This helps operators to know exactly how much charge remains and remember to recharge as planned. Now, thanks to Big Joe's progressive warning system, the operator will be alerted should the battery state of charge fall too low. A lift interrupt and multiple levels of traction speed reduction help give the operator plenty of time to get to a charger without fear of over-discharging the battery.

LXE40 Run Time[1]			
	Application Intensity		
Battery Capacity (kWh)	Light Duty	Medium Duty	Heavy Duty
17.3	9h 45m	5h 45m	4h

1. *Run times are provided for purposes of estimating battery and charger requirements and are not a guarantee. Run times are from fully-charged battery to lift interrupt. Actual run times vary widely based on truck duty cycle, ambient conditions and other factors. A product demo and/or power study are highly recommended.*

CHARGE TIMES

Flexible Charging That Works for You

Thanks to the in-house design and expertise of Big Joe, the charger, battery and forklift work seamlessly together. Big Joe's UL-certified chargers automatically adjust power based on the state of the battery in order to minimize charge time while optimizing the battery's overall service life.

For flexible charging, various offboard chargers, also called "wall chargers," are available. A power study is recommended in order to select the optimal battery and charger combination for your application's unique needs. For convenience, all LXE40 models include a charge port for offboard power, accessible without opening the hood or removing panels.

Regardless of which charger you pick, the design is plug and play. That means minimal operator training and input is needed to keep your operation running smoothly.

Charger Specifications						
Charger Output Power	kW	Offboard Single-Phase Charger			Offboard Three-Phase Chargers	
		1.2	/	2.4	7.2	7.2
Input Voltage	VAC	120	/	240	208/220/240	480
Input Current	A	15	/	15	35	15
Output Current @ 48VDC	A	25	/	50	150	150
LXE40 Charge Time[1]						
Battery Capacity (kWh)	17.3	12h 15m	/	6h 15m	2h	2h

1. *Charge times shown are estimates only and represent charging under ideal conditions and proper power supply to the charger. Charge times are based on recharging from lift interrupt to fully-charged.*

DIAGRAMS

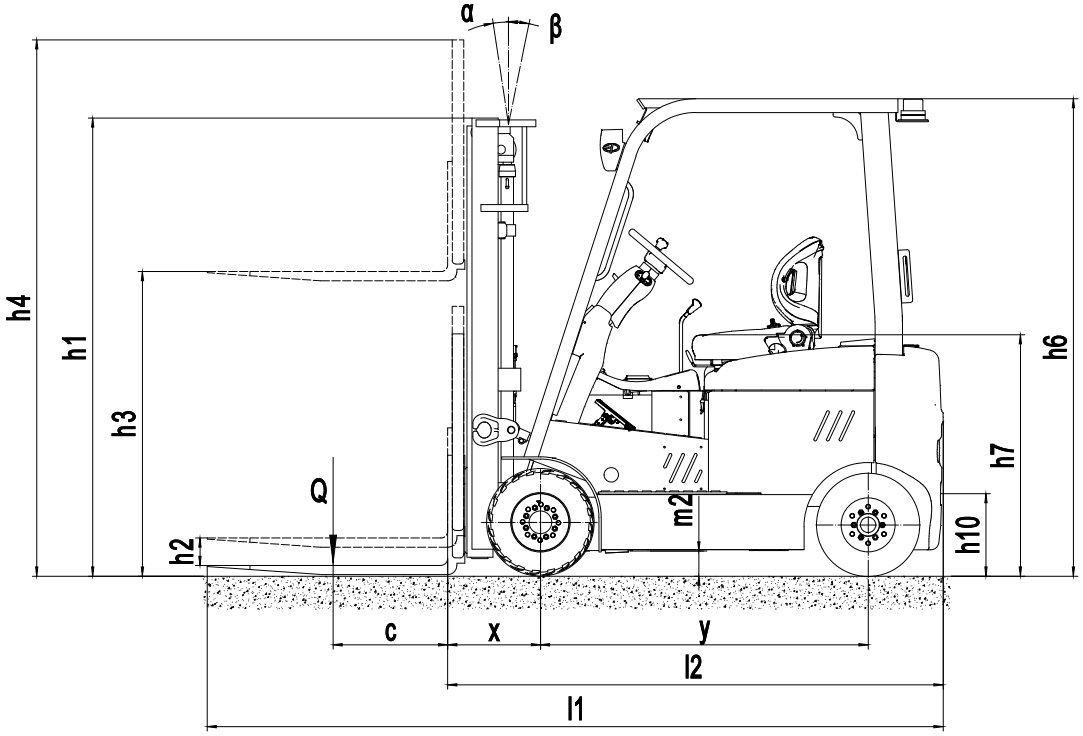
α
β
h4
h1
h3
h2
Q
m2
h6
h7
h10
c
x
y
l2
l1

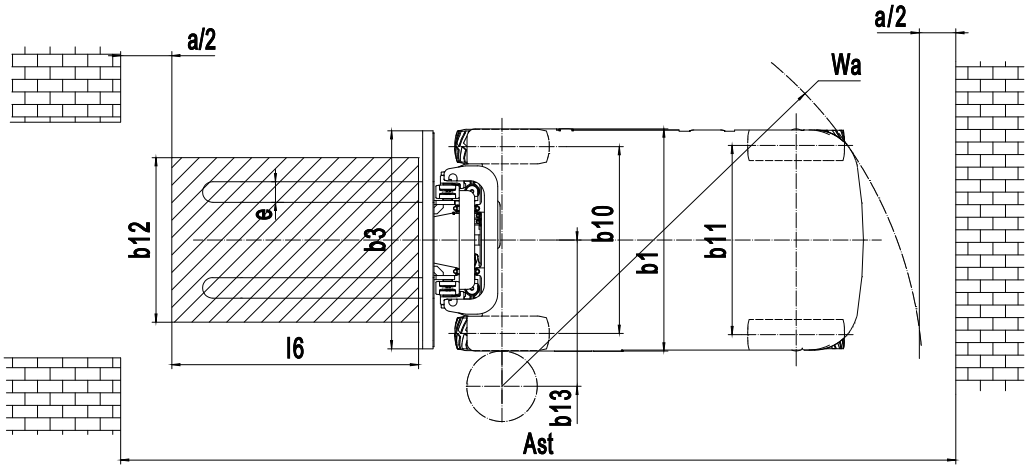
a/2
a/2
Wa
b12
e
b3
b10
b1
b11
l6
b13
Ast

SPECIFICATIONS

Distinguishing mark	1.1	Manufacturer			Big Joe
	1.2	Model designation			LXE40
	1.3	Drive			Electric
	1.4	Operator type			Seated
	1.5	Load capacity	Q	lb.	4000
	1.6	Load center distance	c	in.	24
	1.8	Load distance, center of drive axle to fork	x	in.	15.9
	1.9	Wheelbase	y	in.	57.9
Service weight	2.1	Service weight		lb.	7892
	2.2	Axle loading, laden (front / rear)		lb.	10262 / 1598
	2.3	Axle loading, unladen (front / rear)		lb.	3582 / 4310
Tires/chassis	3.1	Tire type			Pneumatic-solid shaped
	3.2	Tire size, front			200/50-10
	3.3	Tire size, rear			5.00-8
	3.5	Wheels, number (front/rear) x=drive wheels			2x / 2
	3.6	Tread width, front	b10	in.	35.8
	3.7	Tread width, rear	b11	in.	36.2
Dimensions	4.1	Tilt of mast/fork carriage forward/backward	α / ß	°	6 / 6
	4.2	Retracted mast height	h1	in.	84.4
	4.3	Free lift	h2	in.	65.0
	4.4	Lift height	h3	in.	189
	4.5	Height, mast extended w/std LBR	h4	in.	230
	4.7	Height of overheard guard (cabin)	h6	in.	81.9
	4.8	Seat height / standing height	h7	in.	41.3
	4.12	Tow coupling height	h10	in.	14.2
	4.20	Length to face of forks	l2	in.	86.6
	4.21	Overall width	b1/b2	in.	42.5
	4.22	Fork dimensions	s x e x l	in.	1.6 x 4.8 x 42
	4.23	A, B fork carriage class / type A, B			2A
	4.24	Fork carriage width	b3	in.	40.9
	4.31	Ground clearance, laden, below mast	m1	in.	4.3
	4.32	Ground clearance, center of wheelbase	m2	in.	4.1
	4.34.1	Right angle stack aisle width[1]		in.	97.8
	4.35	Turning radius	Wa	in.	81.9
Performance Data	5.1	Travel speed, laden/unladen		mph	6.5 / 8.7
	5.2	Lifting speed, laden/unladen		fpm	55.1 / 82.6
	5.3	Lowering speed, laden/unladen		fpm	84.6 / 88.6
	5.8	Max gradeability, laden/unladen		%	10.5 / 14
	5.10	Service brake			Regenerative
	5.11	Parking brake			Electromagnetic
Electric	6.1	Drive motor rating S2 60min		kW	6
	6.2	Lift motor rating at S3 15%		kW	7.5
	6.4.1	Battery capacity[2]		kWh	17.3
	6.4	Battery voltage / nominal capacity[2]		V/Ah	48/360
Additional	10.1	Operating pressure for attachments		PSI	2750
	10.2	Oil flow for attachments		gpm	3 - 5
	10.5	Steering design			Hydraulic

[1] Basic right angle stack (add load length and clearance)

MAST SPECIFICATIONS

LXE40												
Mast Type	Overall Dimensions (in.)[1]										Rated Capacity (lb.) at 24" Load Center[2]	
	Lift Height (Top of Forks)	Lowered Height	Extended Height				Free Lift Height					
			no LBR	40.9" LBR	48" LBR	60" LBR	no LBR	40.9" LBR	48" LBR	60" LBR	Carry Height	Max Fork Ht
3-Stage Full Free Lift	189	84.4	208.4	229.9	237.0	248.8	65.0	43.5	36.4	24.6	4000	2650
	197	87.0	216.3	237.8	244.9	256.7	67.6	46.1	39.0	27.2	4000	2650

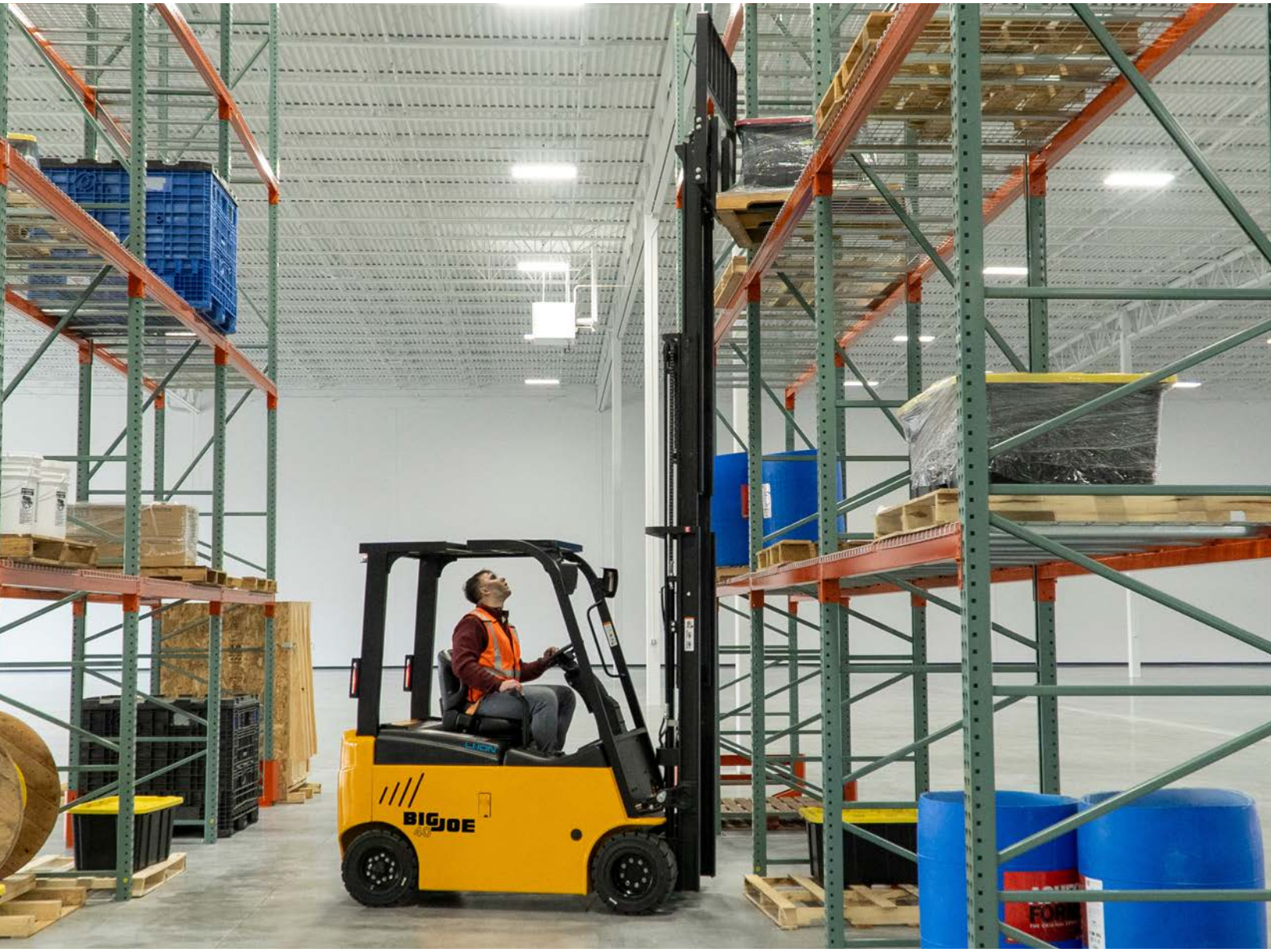

1. *LBR = Load Backrest Extension, measured from top face of fork to top of LBR*
2. *Rated capacities shown with integral sideshifter.*

STANDARD/OPTIONAL EQUIPMENT

● Standard
○ Optional

Electrical System	48V electrical system	●
	Weather-resistant IPX4 rating, suitable for most outdoor use	●
	Brushless AC motor drive system w/regenerative braking	●
	Brushless AC hydraulic pump motor	●
	Transistor motor controllers with infinite speed control	●
Battery and Charging	UL-Recognized 17.3kWh (48V / 360 Ah) integrated lithium-ion battery	●
	320A DIN connector for offboard charging	●
	UL-Certified offboard 1.2kW / 2.4kW battery charger for use with 120V / 240V AC single-phase power (25A / 50A)	○
	UL-Certified offboard 8kW battery charger for use with 208V / 220V / 240V AC three-phase power (150A)	○
	UL-Certified offboard 8kW battery charger for use with 480V AC three-phase power (150A)	○
	Telemetry with over-the-air updating	●
Drive System	Fully-electric regenerative service brakes	●
	Electronic parking brake	●
	Power-assisted steering	●
Wheels & Tires	Pneumatic-shaped tires	●
	Non-marking pneumatic-shaped tires	○
Front End Equipment	3-stage full free-lift mast	●
	Mast tilt: 6° forward 6° backward	●
	Hook type carriage	○
	Hook type integral sideshifting carriage	●
	Hook type carriage with hang-on sideshifter	○
	Hook type carriage with hang-on sideshifter and fork positioner	○
	42” hook type standard taper forks	●
	40.9” high load backrest	●
	48” high load backrest	○
	60” high load backrest	○

Hydraulics	3-way hydraulic control valve	●
	4-way hydraulic control valve	○
	1 auxiliary hose group	●
	2 auxiliary hose group	○
Operator Compartment	2-way adjustable full-suspension vinyl seat	●
	Entry assist grab handle	●
	Rear grab handle with integrated horn button	●
	Cup holder	●
	Digital display	●
	Steering wheel with integrated spinner knob	●
	USB accessory charging port	●
Lights and Alarms	LED light package (headlights, brake lights, turn signals)	●
	LED strobe light	●
	Rear-facing blue spot light	●
	Front-facing blue spot light	○
	Back-up alarm	●
	Self-adjusting back-up alarm	○
	Horn	●
	White noise sound generator (always on)	○
	Left and right red side curtain lights	○
Warranty	84 months / 12,000 hours - Integrated lithium-ion battery warranty	●
	36 months / 6,000 hours - Frame & powertrain warranty	●
	24 months / 4,000 hours - Full truck warranty	●

Established in 1951, Big Joe is a customer-driven North American material handling equipment company. We distribute innovative products for in-between-handling applications, purpose-built counterbalanced lithium forklifts, and market-leading autonomous solutions. Based in Madison, Wisconsin, we provide engineering expertise, customer service, aftermarket parts, and warranty support to our extensive dealer network and customers.

Certification: Big Joe lift trucks are built in compliance with ANSI B56.1 and OSHA section 1910.178(A)(2). Lift trucks specifications are subject to change without notice. Any specifications critical to the intended application of the forklift should be reviewed with your Big Joe dealer. Images may show optional equipment not available in all regions.

BIG JOE

630-916-2600
sales@bigjoeforklifts.com
bigjoeforklifts.com

2025-03_27_V01