WS25-40

2,500-4,000 LB. CAPACITY

HIGH-PERFORMANCE STRADDLE STACKER

SPECIFICATIONS

MAXIMUM OPERATOR CONFIDENCE AND PRODUCTIVITY SUPPORTED BY AGILITY AND CONTROL

Increasingly tight warehouse and production environments challenge operators to get the job done on time and on target. WS25-40 walkie stackers help operators maneuver in tight spaces with a class-leading, compact design. Fast lift and lower speeds are adjustable and combine with fully proportional controls, giving operators pinpoint control.

FEATURES

Compact Footprint

WS25-40 models feature a compact chassis design, easy to navigate through tight aisles. A creep speed control button on the control head allows operators to slowly move the stacker with the handle in a vertical position.

High Performance

Big Joe WS25-40 stackers deliver class leading performance with 3,000 lb. and 4,000 lb. models providing the highest loaded lift speed among leading competitors.[1] Three performance modes are selectable via the truck display, and finer adjustments are available to tailor the truck's performance and controls to meet customer needs.

Lithium-Ion Power

LI-ION

In spite of its compact size, WS25-40 has ample energy thanks to the Lithium-ion battery, which comes as standard equipment. Lithium Iron Phosphate (LFP) chemistry is utilized for long life and stability. Every unit includes an onboard charger and cable to plug into standard 120V wall outlets, taking the guesswork out of charging and giving you the flexibility to charger wherever it makes sense for your operation.

1- Competitive lifting speed evaluation based on published specifications among comptetitor stackers.

FEATURES

Proportional Controls

Rather than on/off controls like those used on some walkie stackers, WS25-40 models feature levers with proportional controls. The more the lever is pushed down, the faster the hydraulic speed. Being able to lift and lower slowly helps operators pick and place loads with care to avoid damaging product or packaging.

Ease of Use for Operator Productivity

The low pivot point of the control handle helps operators of all heights to comfortably make those longer runs. A convenience tray on top of the unit provides space for notes, tools, gloves and other commonly used items. USB ports supply onboard power when needed.

Excellent Visibility

Careful attention to the mast design, including placement of lift chains behind the upright channels, results in a wide visibility window for the operator. Seeing fork tips and load position, whether down low or up high helps with operator accuracy.

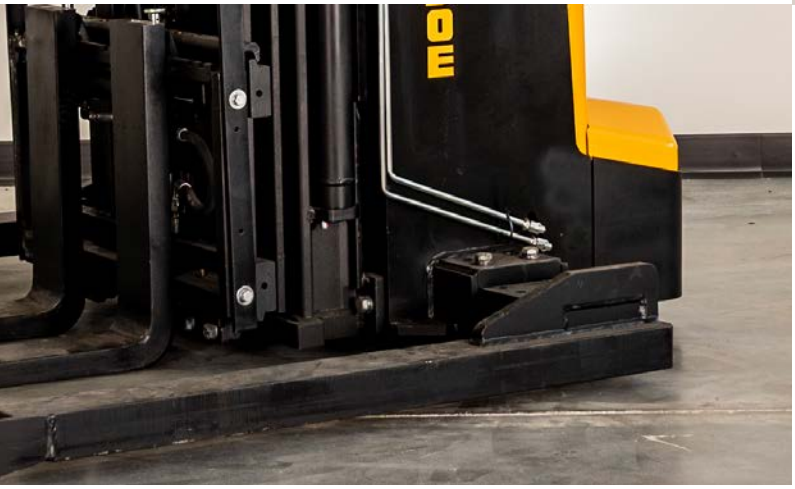

Adjustable Straddles

The straddle legs are easily adjustable for various pallet sizes. Bolts on each leg can be quickly removed to change the width to suit the application.

DIAGRAMS

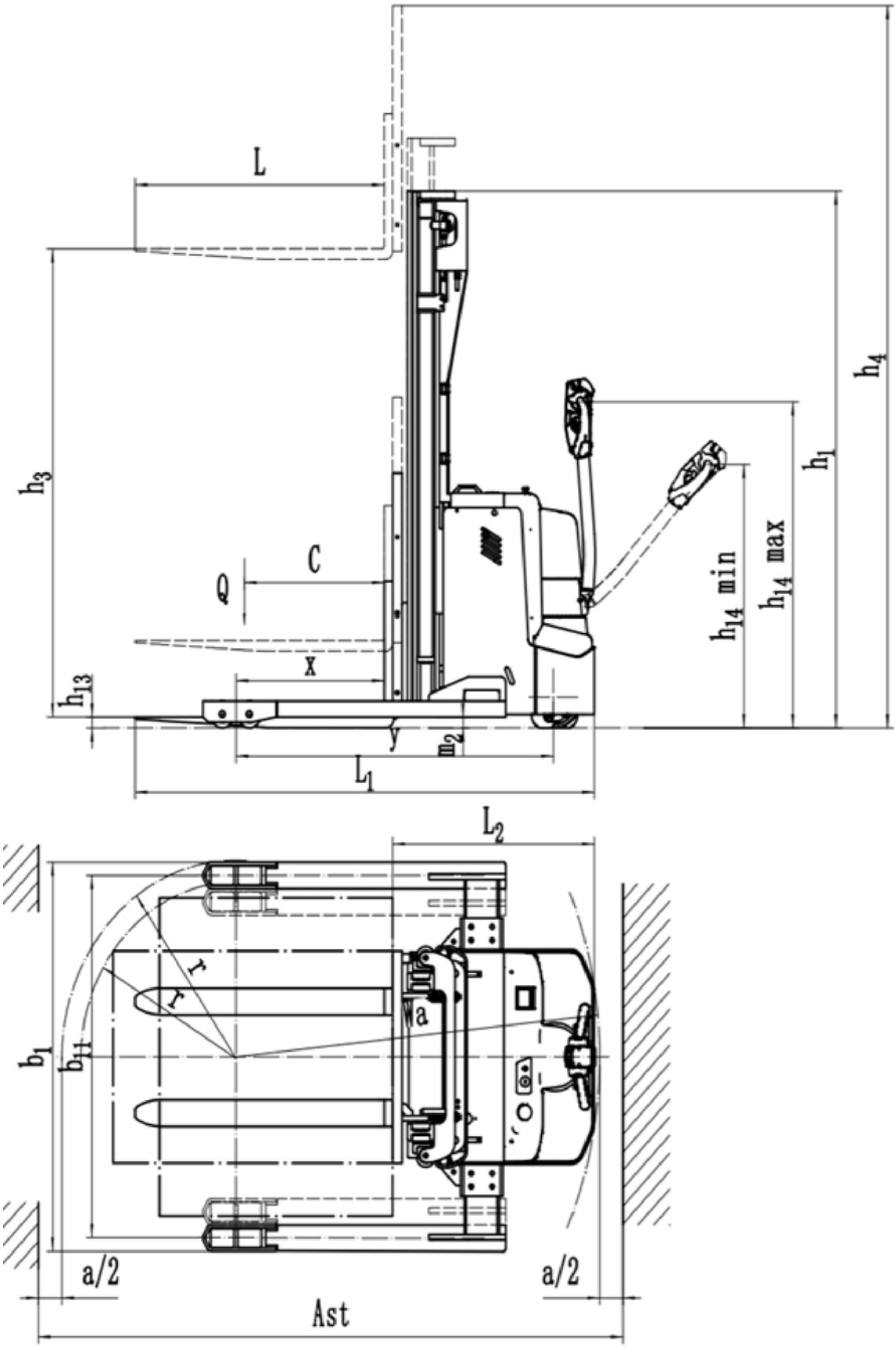

SPECIFICATIONS

Distinguishing mark	1.1	Manufacturer			Big Joe		
	1.2	Model designation			WS25	WS30	WS40
	1.3	Drive			Electric		
	1.4	Operator type			Pedestrian		
	1.5	Load capacity	Q	lb.	2500	3000	4000
	1.6	Load center distance	c	in.	24		
	1.8	Load distance, center of drive axle to fork	x	in.	25.3	25.1	
	1.9	Wheelbase	y	in.	50.3	53.6	
Service weight	2.1	Service weight		lb.	2430	2970	3430
	2.2	Axle loading, laden (front / rear)		lb.	1800 / 2630	2160 / 2810	2330 / 3100
	2.3	Axle loading, unladen (front / rear)		lb.	1630 / 800	1990 / 980	2200 / 1230
Tires/chassis	3.1	Tire type			Polyurethane		
	3.2	Tire size, front			9x3		
	3.3	Tire size, rear			4x2		
	3.4	Additional wheels (caster wheels)		in.	4x2.5		
	3.5	Wheels, number (front/rear) x=drive wheels			1x, 2 / 4		
	3.6.1	Tread width, drive	b10	in.	21.9		
	3.7.1	Tread width, load	b11	in.	41 / 45 / 49 / 53	46 / 50 / 54	
Dimensions	4.2	Retracted mast height	h1	in.	82.9		
	4.3	Free lift height	h2	in.	0		
	4.4	Lift height	h3	in.	126		
	4.5	Height, mast extended	h4	in.	162		
	4.9	Height of tiller handle in drive position (min/max)	h14	in.	1.1 / 1.8		
	4.10	Height of wheel arms	h8	in.	3.9		
	4.15	Lowered height	h13	in.	2.2		
	4.19	Overall length	l1	in.	74.2	77.5	
	4.20	Length to face of forks	l2	in.	32.1	35.4	
	4.21	Overall width	b1/b2	in.	44 / 48 / 52 / 56	50 / 54 / 58	
	4.22	Fork dimensions	s x e x l	in.	4.0 x 1.6 x 42		4.8 x 1.6 x 42
	4.24	Fork carriage width	b3	in.	31.4		
	4.25	Fork spread	b5	in.	7.9 - 30.0		
	4.26	Inside width between straddle arms	b4	in.	38 / 42 / 46 / 50	42 / 46 / 50	
	4.31	Ground clearance, below mast	m1	in.	1.4		
	4.32	Ground clearance, center of wheelbase	m2	in.	1.4		
	4.34.1	Right angle stack aisle width	Ast	in.	See Aisle Width Tables		
	4.35	Turning radius	Wa	in.	58.4	61.3	
Performance Data	5.1	Travel speed, laden/unladen		mph	3.1 / 3.4		
	5.2	Lifting speed, laden/unladen		fpm	35.4 / 51.2		31.5 / 39.4
	5.3	Lowering speed, laden/unladen		fpm	70.9 / 63.0		55.1 / 51.2
	5.8	Max gradeability, laden/unladen		%	10 / 23	8.5 / 23	6.0 / 23
	5.10	Service brake			Electromagnetic		
Electric	6.1	Drive motor rating S2 60min		kW	1.6		
	6.2	Lift motor rating at S3 15%		kW	4.5		
	6.4	Battery voltage / nominal capacity		V/Ah	24V / 100Ah	24V / 205Ah	
	6.5	Battery weight		kg	88	134	
Additional	8.1	Type of drive control			AC		
	10.5	Steering design			Mechanical		
	15.1	Charger output current		A	30		

AISLE WIDTHS

All measurements shown are in inches

WS25 Min. Right Angle Stack without Clearance (in.)				
38 in. Straddle	Load Length			
Load Width	36	40	42	48
36	80.4	81.6	82.9	87.3
42 in. Straddle	Load Length			
Load Width	36	40	42	48
36	82.4	82.4	82.9	87.3
40	82.4	83.2	84.4	88.6
46 in. Straddle	Load Length			
Load Width	36	40	42	48
36	84.4	84.4	84.4	87.3
40	84.4	84.4	84.4	88.6
42	84.4	84.4	85.2	89.2
50 in. Straddle	Load Length			
Load Width	36	40	42	48
36	86.4	86.4	86.4	87.3
40	86.4	86.4	86.4	88.6
42	86.4	86.4	86.4	89.2
48	86.4	86.5	87.6	91.4

WS30-40 Min. Right Angle Stack without Clearance (in.)				
42 in. Straddle	Load Length			
Load Width	36	40	42	48
36	86.3	86.3	86.3	90.5
40	86.3	86.3	87.5	91.7
46 in. Straddle	Load Length			
Load Width	36	40	42	48
36	88.3	88.3	88.3	90.5
40	88.3	88.3	88.3	91.7
42	88.3	88.3	88.3	92.4
50 in. Straddle	Load Length			
Load Width	36	40	42	48
36	90.3	90.3	90.3	90.5
40	90.3	90.3	90.3	91.7
42	90.3	90.3	90.3	92.4
48	90.3	90.3	90.7	94.5

MAST CHART

Mast Type	Overall Dimensions (in.)			
	Lift Height	Lowered Height	Extended Height	Free Lift Height
2-Stage Limited Free Lift	102	71.9	138.4	-
	126	82.9	162.0	-
3-Stage Full Free Lift	157	71.9	193.5	32.2
	189	83.5	225.0	44.1

CAPACITIES

Model	Lift Height	Truck Weight	Rated Capacity at 24 in. Load Center (lb.)	
	(in.)	(lb.)	Carry Height	Max. Fork Height
WS25	102	2220	2500	2500
	126	2310	2500	2500
	157	2500	2500	2500
WS30	102	2470	3000	3000
	126	2560	3000	3000
	157	3150	3000	3000
	189	3260	3000	2200
WS40	102	2480	4000	4000
	126	2570	4000	4000
	157	3170	4000	3000
	189	3280	4000	2200

STANDARD/OPTIONAL EQUIPMENT

● Standard
○ Optional

Electrical System	24V infinitely variable travel control	●
Battery and Charging	Lithium-ion battery with onboard 30A charger	●
	Lithium Ion Phosphate (LFP) battery chemistry	●
Drive System	AC drive motor	●
	Anti-rollback and neutral braking	●
	Regenerative braking	●
Wheels & Tires	Drive tire: (1) 9 in. x 3 in. smooth polyurethane	●
	Load wheels (2) 4 in. x 2 in. polyurethane	●
	Traction drive tire - rubber	○
	Traction drive tire - poly	○
Front End Equipment	Class II ITA fork carriage: 16.25 in. tall x 31.4 in. wide	●
	42 in. standard taper forks	●
	36 in. tall load backrest	●
	ClearView polycarbonate mast guard	●
	Hang-on sideshifter	○
	48 in. tall load backrest	○
	36 in. forks	○
	48 in. forks	○
Operator	Thumb control travel functions	●
	Crawl speed travel control	●
	Proportional fingertip hydraulic controls	●
	Belly button reversing switch and horn	●
	LCD display with battery discharge indicator, hour meter and programming controls	●
	Dual USB charge ports	●
	Convenient storage tray	●
	Key switch	●

Established in 1951, Big Joe is a customer-driven North American material handling equipment company. We distribute innovative products for in-between-handling applications, purpose-built counterbalanced lithium forklifts, and market-leading autonomous solutions. Based in Madison, Wisconsin, we provide engineering expertise, customer service, aftermarket parts, and warranty support to our extensive dealer network and customers.

Certification: Big Joe lift trucks are built in compliance with ANSI B56.1 and OSHA section 1910.178(A)(2). Lift trucks specifications are subject to change without notice. Any specifications critical to the intended application of the forklift should be reviewed with your Big Joe dealer. Images may show optional equipment not available in all regions.

BIG JOE

630-916-2600
sales@bigjoeforklifts.com
bigjoeforklifts.com

2025-12_09_V01